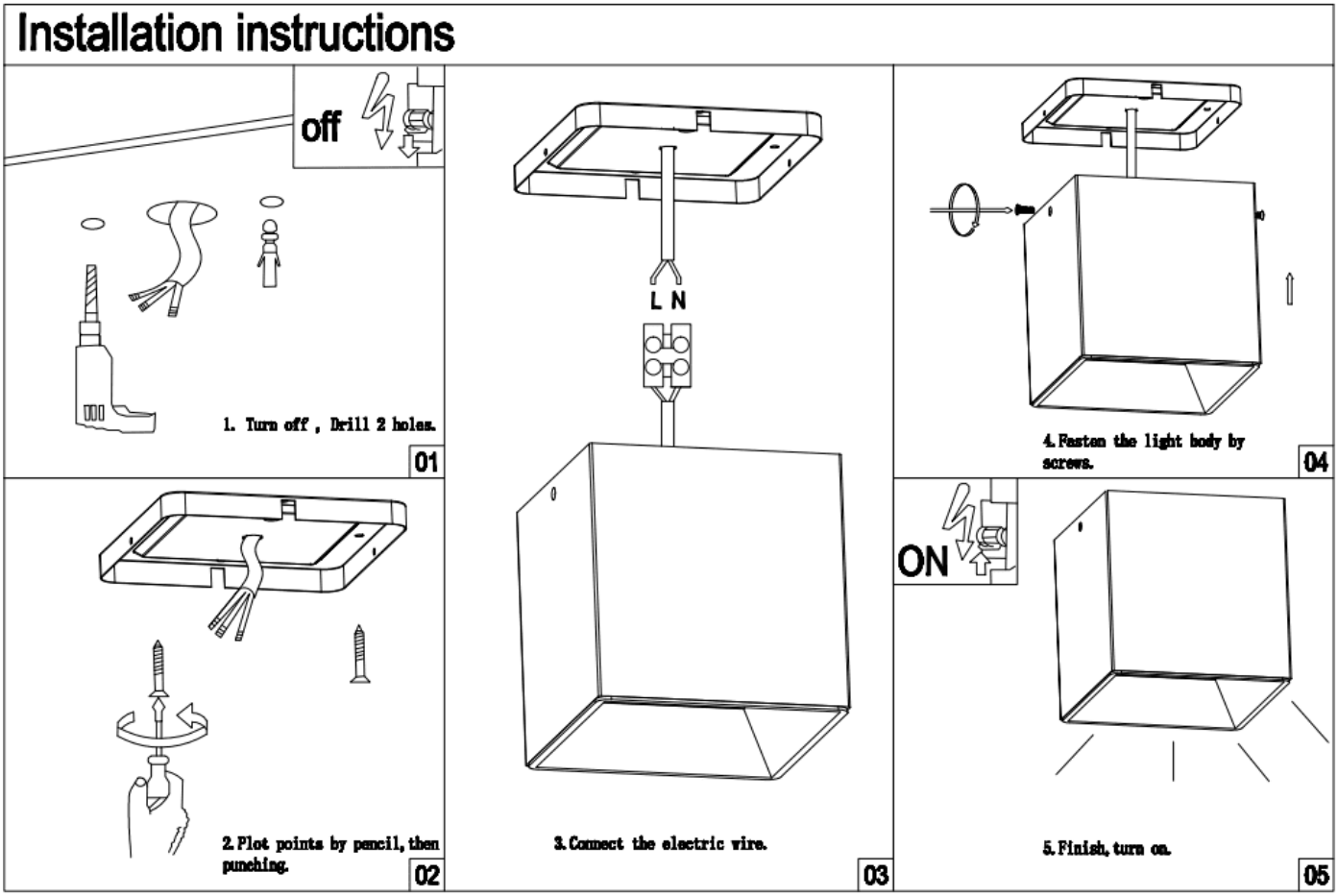Code article 86.OC01.1333.01